Trio GENERATOR

VOLVO PENTA

MADE IN TURKEY

DATAKOM

D-500-LITE

INTERNET ENABLED GENSET CONTROLLER

International Organization for Standardization ISO 14001:2015

ISO 9001

OUTPUT VALUES

Standby Power	Voltage	230/400
Standby Power	kVA	650
Standby Power	kW	520
Standby Power	Amper	935
Prime Power	Voltage	230/400
Prime Power	kVA	585

Prime Power	kW	468
Prime Power	Amper	842

DIESEL ENGINE

Brand	VOLVO
Model	TAD1642GE
Max. Total Output Pow. (kWm/hp)	536/729
Cylinder Displacement (lt)	16.12
Cylinder Orientation	6 Single Line
Bore x Stroke(mm*mm)	144 x 165
Compression Ratio	16;5
Governor Type	Electronic
Rotation	1500 RPM
Aspiration System	TurboCharged-Intercooler
Injection	Direct
Cooling System	Water Cooled
Electrical System(V DC)	24
Oil Capacity (lt)	42
Engine Coolant Capacity (lt)	60
Fuel Cons. %50 (lt/h)	63
Fuel Cons. %75 (lt/h)	92
Fuel Cons. %100 (lt/h)	126

ALTERNATOR

Standby Power (kVa/kw)	650/520
Prime Power (kVa/kw)	585/468
Brand	LEROY SOMER
Output Voltage (V)	231/400
Frequency (Hz)	50
Stationary Vol. Regulation(±)	0,01
Short Circuit Current	%300 (10 sec)
Insulation	H
Protection	IP23
E ciency (%)	92
Overloading	110% for 1 hour
Power Factor (cos Q=0.8)	0,8
Tot. Harmonic Dist. Rate	<1 %
Connection Type	Star
Number of Pole	4
Number of Bearing	Single

DIMENSIONS & WEIGHT

Without Canopy	Width	2000 mm
Without Canopy	Length	4500 mm
Without Canopy	High	2500 mm
Without Canopy	Weight	3920 kg
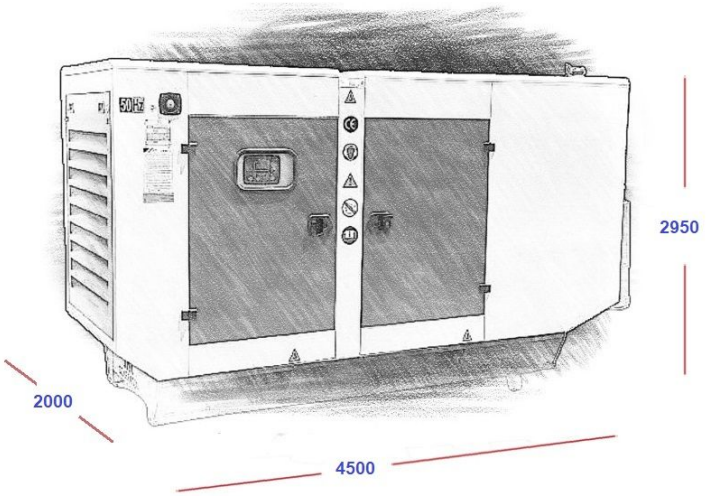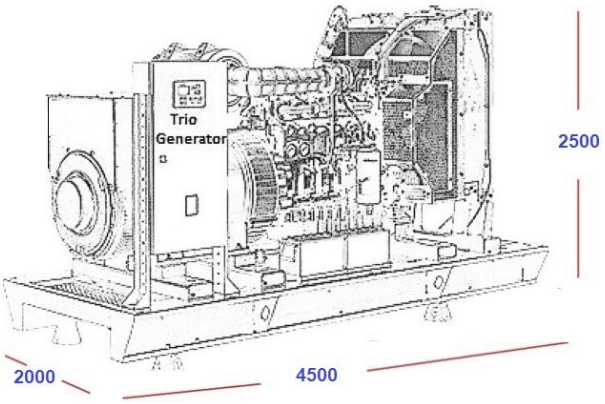
Without Canopy	Fuel Tank Capacity	1200 lt
With Canopy	Width	2000 mm
With Canopy	Length	4500 mm
With Canopy	High	2950 mm
With Canopy	Weight	4650 kg
With Canopy	Fuel Tank Capacity	1200 lt